STB8400 Sanitary Pressure Transmitter

DESCRIPTION

The STB8400 series is a hygienic, dedicated pressure transmitter manufactured with a diaphragm sensor core design. Its rational structural design and stringent quality standards ensure high reliability and stability. This series features a fully welded stainless steel construction, a cavity-free, perfectly flat diaphragm, on-site display capability, and suitability for harsh environments. It is widely used for pressure measurement and control of high-viscosity fluids or fluids containing particles.

VALUE TO CUSTOMERS

- Non-cavitated rigid flat membrane
- No-cavity corrugated flat film
- Aluminum cast explosion-proof enclosure
- Fully stainless steel structure
- Optional on-site display

POTENTIAL APPLICATIONS

- Slurry pump, paper making industry
- petrochemical engineering
- petrochemical industry
- Spraying equipment, asphalt
- Food and Pharmaceutical
- Environmental Protection,
- Dust Control Engineering

WARNING

PERSONAL INJURY

DO NOT USE these products as safety or emergency stop devices or in any other application where failure of the product could result in personal injury.Failure to comply with these instructions could result in death or serious injury.

All potential use in

aerospace,medical,transportation,agriculture, refrigeration, and industrial applications. To view the entire product portfolio, click our company's website.

Website: www.stablesens.com

Mail: sales@stablefa.com

PERFORMANCE SPECIFICATIONS

Range	-0.1-0-60MPa（Customizable）		
Pressure Accuracy	±0.25%FS、±0.5%FS		
Output	4-20mA、RS485、HART		
Excitation	24VDC		
Load Resistance	Current type: R=(Supply Voltage-8V)/0.02Ω		
Compensated Temp. Range	0-85°C	Operating Temp. Range	-20-120°C
Proof pressure	150%	Burst pressure	200%
Temperature drift	±0.02%FS/°C	Long term stability	±0.2%FS/年
Pressure port types	M20*1.5、G1/2、M27*2、1.5inch clamp、DN50 flange(Customizable)		
Electrical connector types	2088 junction box		
Housing	stainless steel 304、316L		

ELECTRICAL CONNECTOR TYPE DIMENSIONS

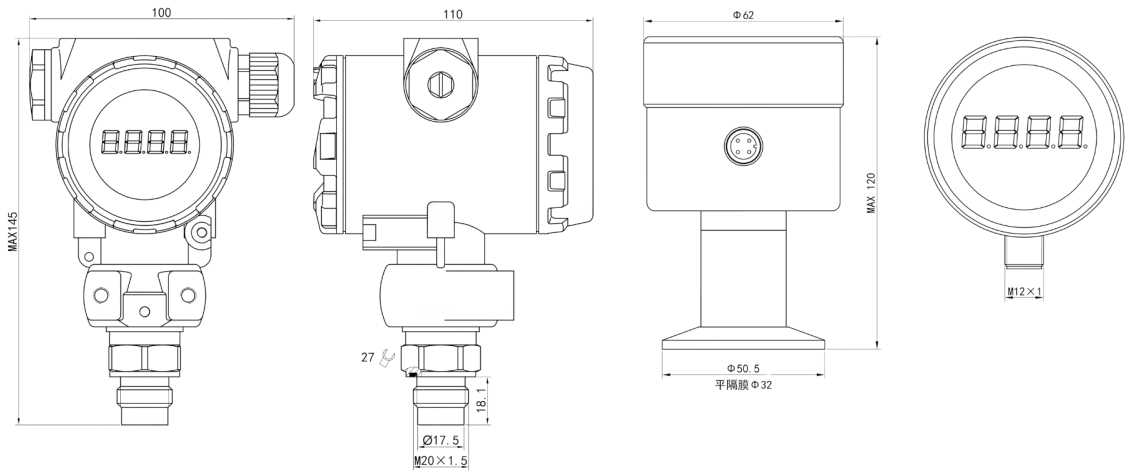

Beijing Stablesens Technology Co., Ltd.

Website:www.stablesens.com Mail:sales@stablefa.com Tel:86-10-56676110

Room 1809, Building 61, No. 2 Jingyuan North Street,Beijing Economic-Technological Development Area,Beijing, China